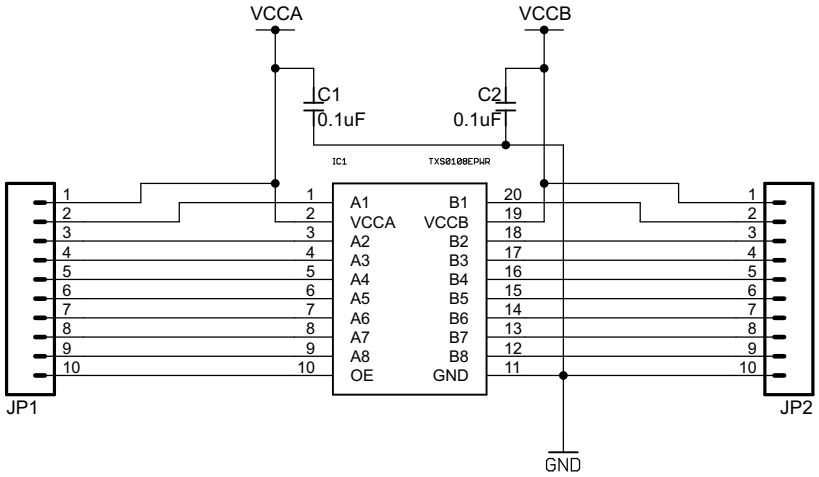

Switch Science, Inc.	
TXS0108EPW_breakout	
2015/03/27 13:03:37	
Sheet: 1/1	