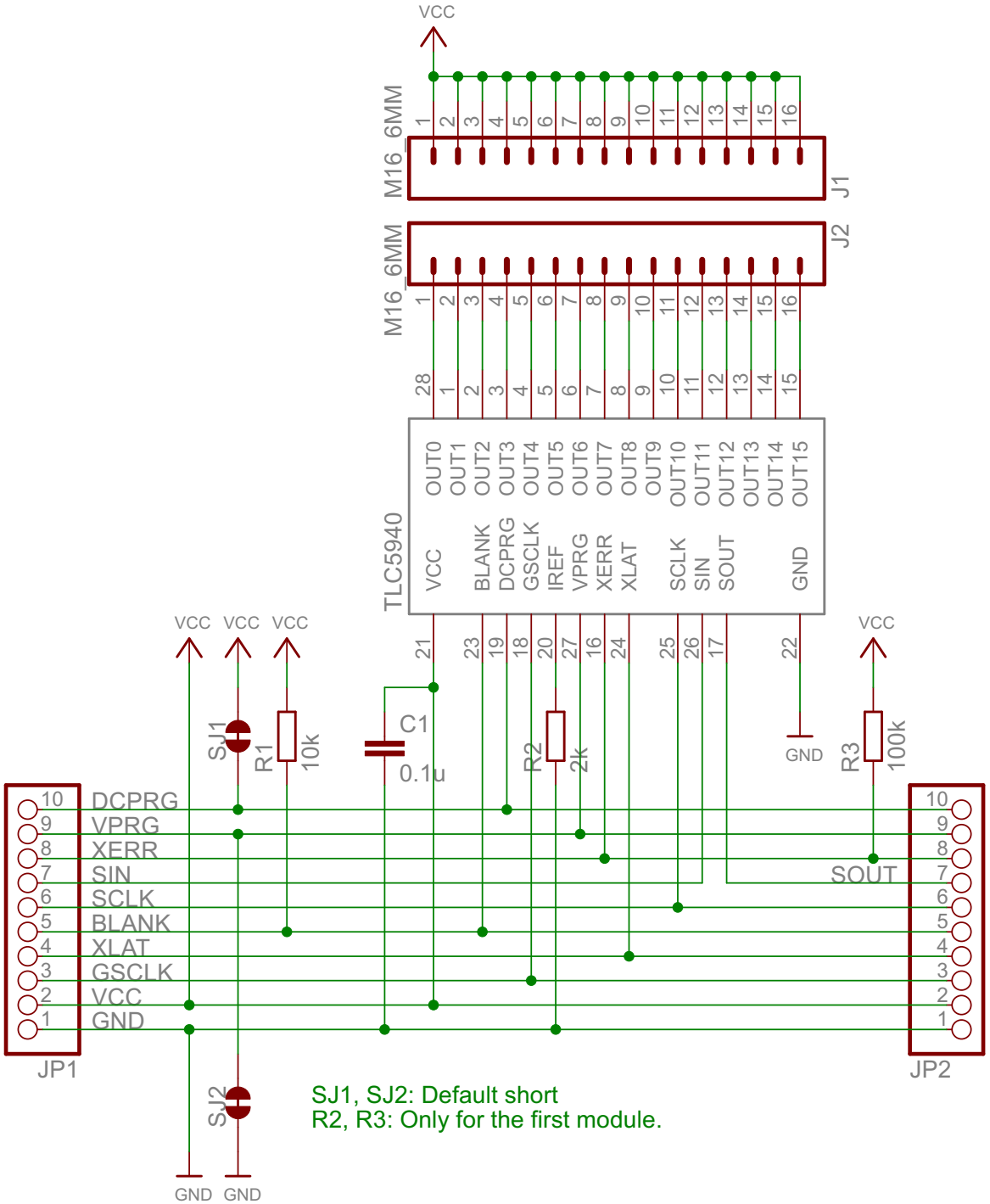
VCC
M16_6MM
J1
J2
TLC5940
VCC
BLANK
DCPRG
GSCLK
IREF
VPRG
XERR
XLAT
SCLK
SIN
SOUT
GND
OUT0
OUT1
OUT2
OUT3
OUT4
OUT5
OUT6
OUT7
OUT8
OUT9
OUT10
OUT11
OUT12
OUT13
OUT14
OUT15
SJ1
R1
10k
C1
0.1u
R2
2k
GND
R3
100k
DCPRG
VPRG
XERR
SIN
SCLK
BLANK
XLAT
GSCLK
VCC
GND
SOUT
JP1
JP2
SJ2
SJ1, SJ2: Default short
R2, R3: Only for the first module.