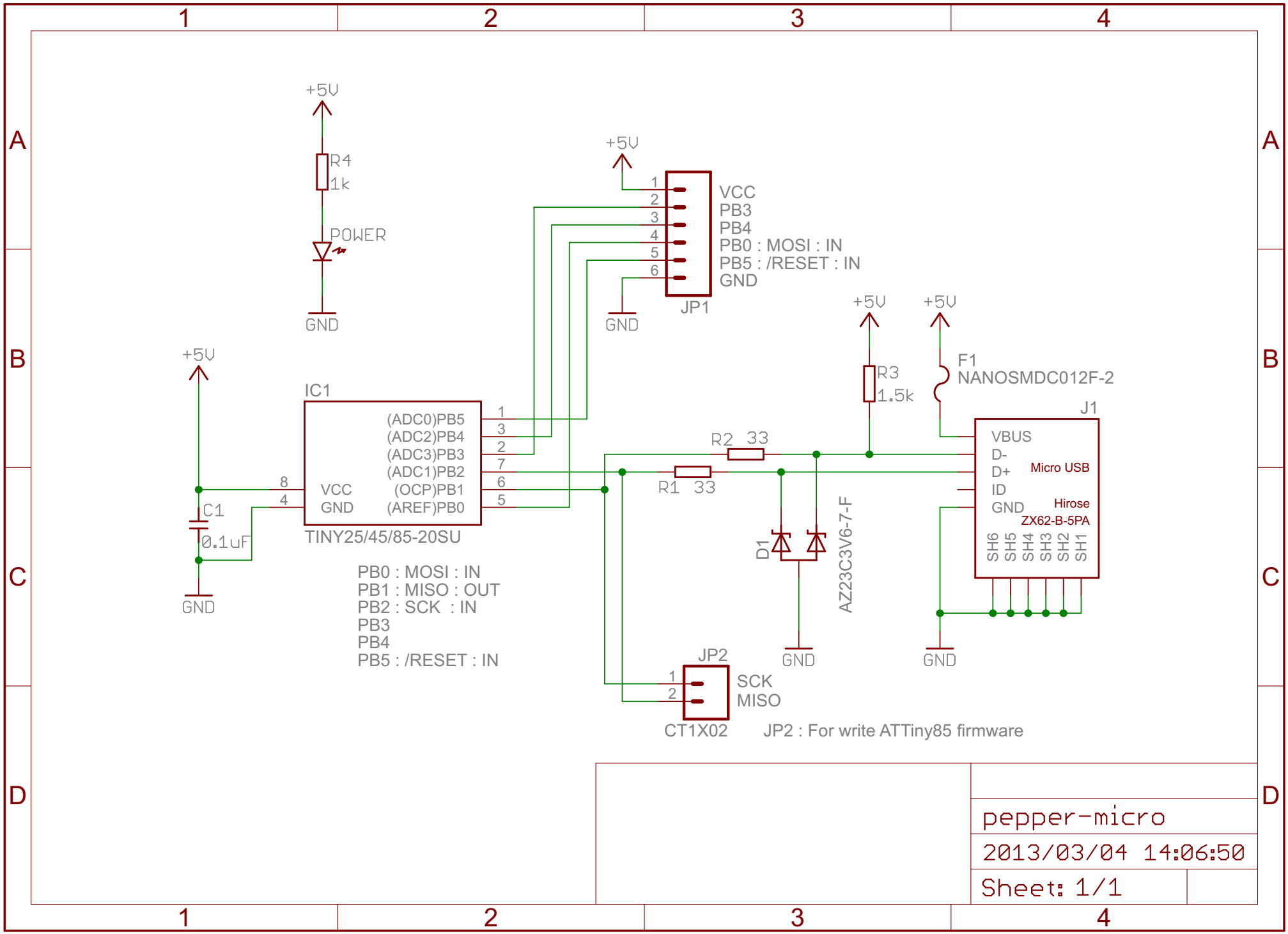
+5V
R4
1k
POWER
GND
+5V
1
2
3
4
5
6
VCC
PB3
PB4
PB0 : MOSI : IN
PB5 : /RESET : IN
GND
JP1
GND
+5V
+5V
R3
1.5k
F1
NANOSMDC012F-2
J1
VBUS
D-
D+
ID
GND
Micro USB
Hirose
ZX62-B-5PA
SH6 SH5 SH4 SH3 SH2 SH1
+5V
IC1
(ADC0)PB5
(ADC2)PB4
(ADC3)PB3
(ADC1)PB2
(OCP)PB1
(AREF)PB0
VCC
GND
8
4
C1
0.1uF
GND
TINY25/45/85-20SU
PB0 : MOSI : IN
PB1 : MISO : OUT
PB2 : SCK : IN
PB3
PB4
PB5 : /RESET : IN
R2 33
R1 33
D1
AZ23C3V6-7-F
GND
GND
JP2
SCK
MISO
CT1X02
JP2 : For write ATTiny85 firmware
pepper-micro
2013/03/04 14:06:50
Sheet: 1/1