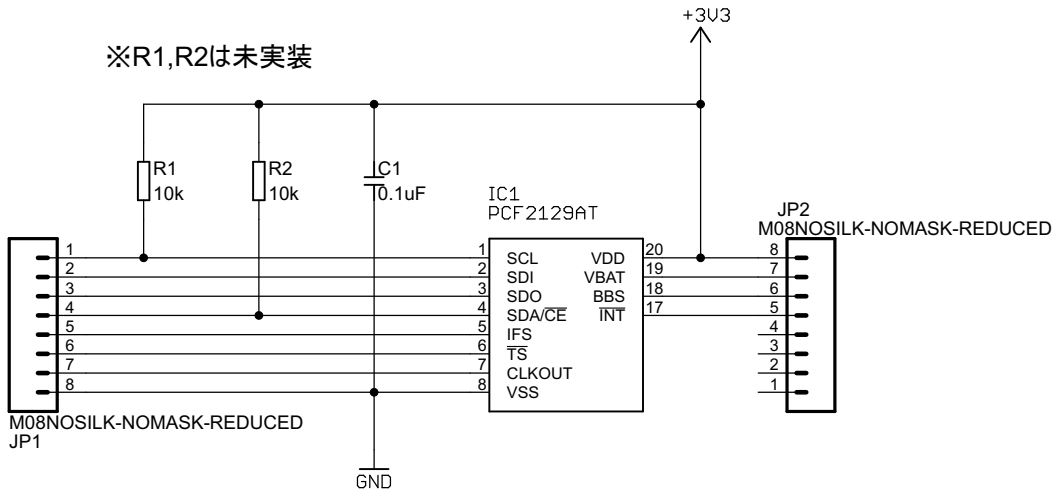

Switch Science, Inc.	
PCF2129AT_breakout	
2015/04/28 14:40:25	
Sheet: 1/1	