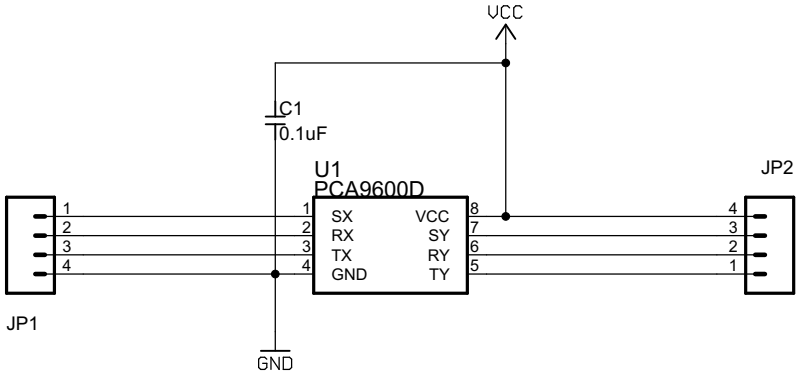

Switch Science, Inc.	
PCA9600D_breakout	
2015/06/09 11:11:52	
Sheet: 1/1	