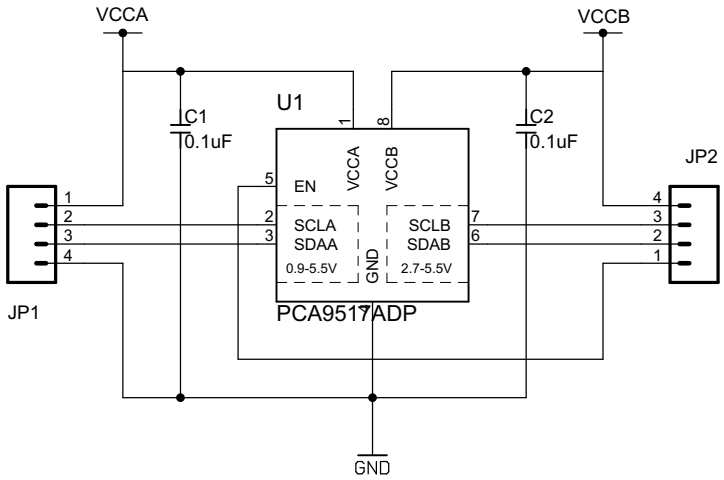

Switch Science, Inc.	
PCA9517ADP_breakout	
2015/06/02 16:36:21	
Sheet: 1/1	