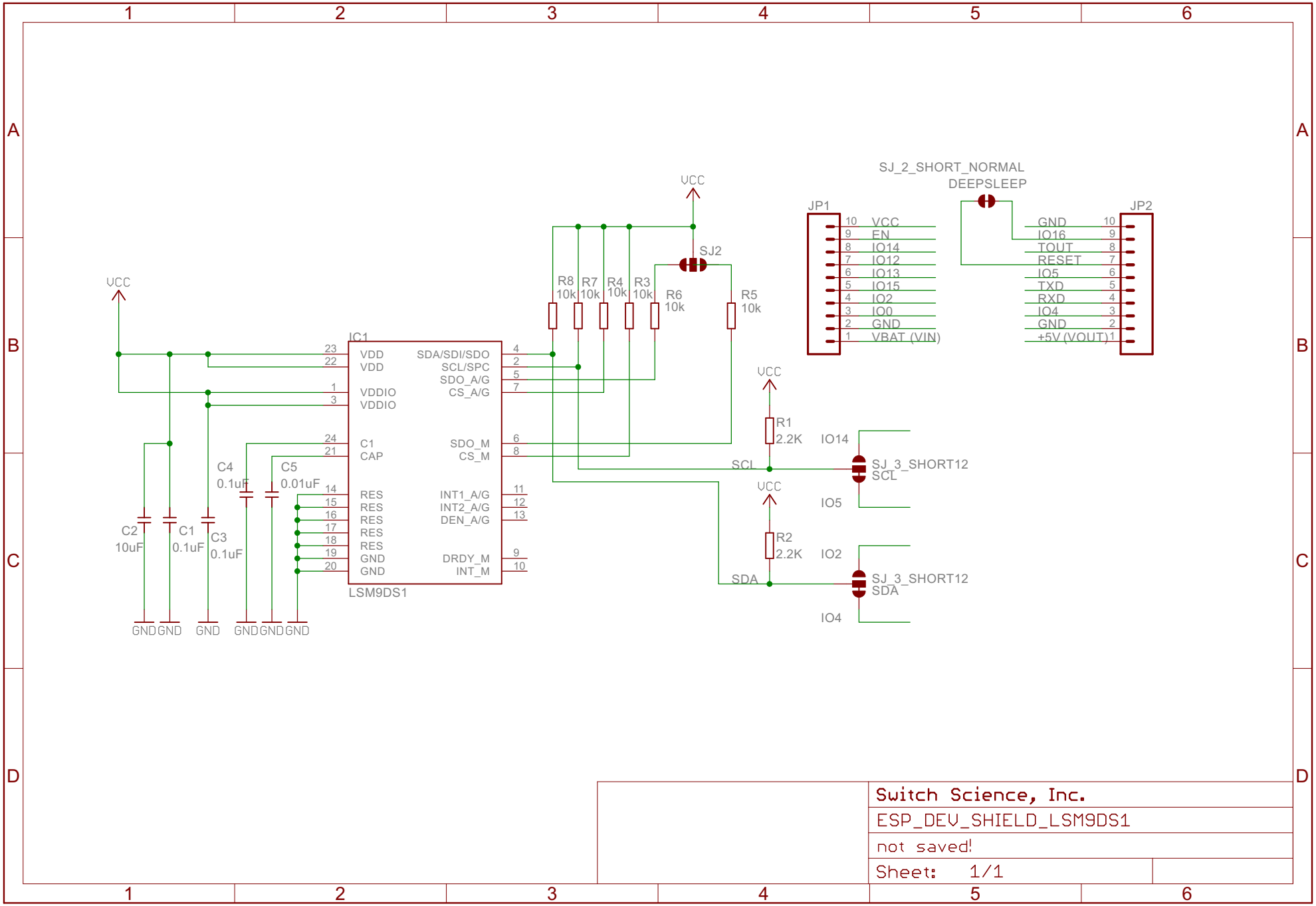

Switch Science, Inc.	
ESP_DEV_SHIELD_LSM9DS1	
not saved!	
Sheet: 1/1	