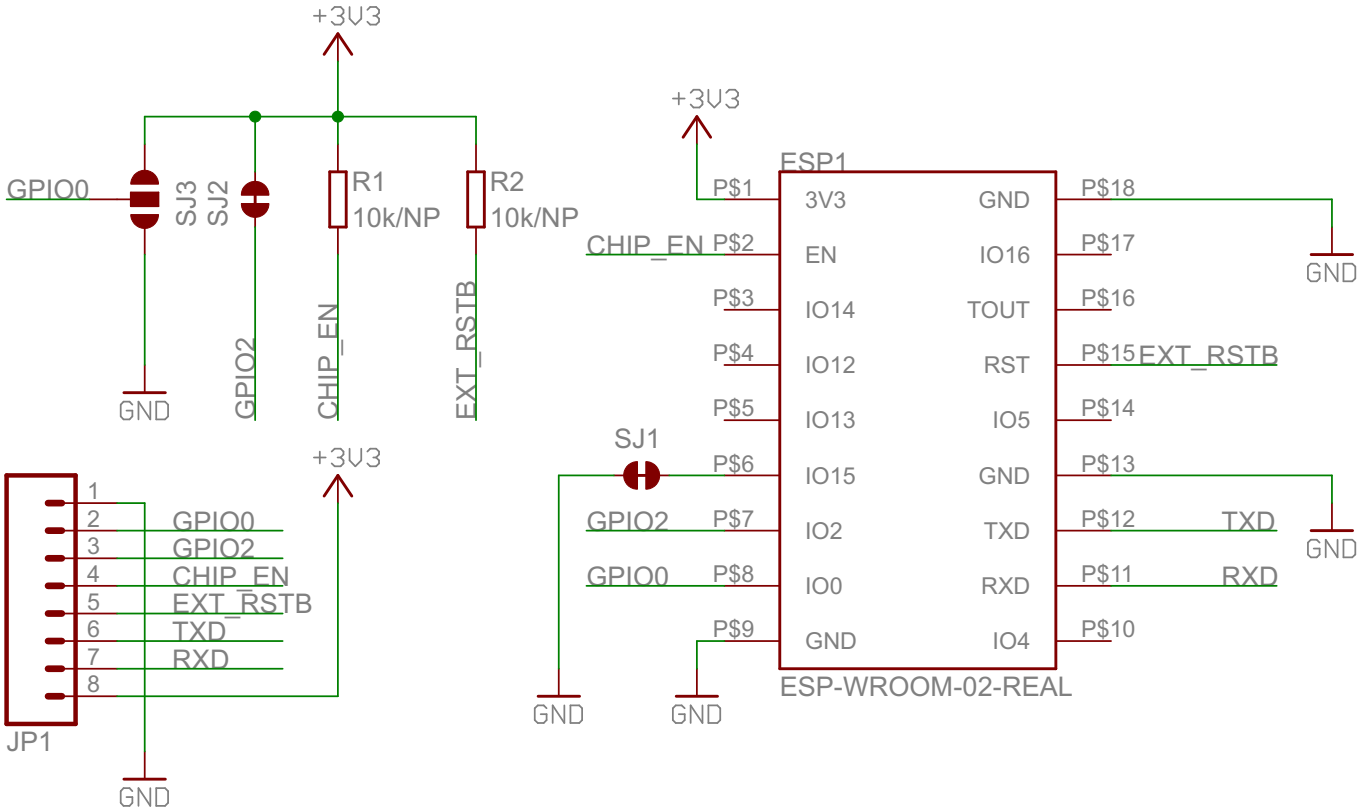

Switch Science, Inc.

ESP-WROOM-02_breakout_simple

2015/07/23 14:30:09

Sheet: 1/1